Pipet Tips

ДИА•М современная лаборатория www.dia-m.ru заказ on-line

I. APPLICATIONS

1. For use with pipettors for the measure and transfer of liquids/chemicals

II. FEATURES

1. Materials: Strong, medical-grade polypropylene
2. Chemically resistant to alcohols and mild organic solvents
3. 100% inert
4. Both tips and racks are autoclavable
5. Universal fit
6. Certified RNase & DNase Free

III. TIP DESIGN

1. 10µl, 200µl, and 1000µl tip sizes
2. All sizes available in non-sterile bulk or sterile racked packaging
3. 10µl and 200µl tip, extended 1000µl, and extra-Long 1000µl are graduated, 1000µl is non-graduated

IV. PACKAGING

1.Bulk Tips (10µl, 200µl, 1000µl, and Extended 1000µl, Extra-Long 1000µl)

a). 10µl: Packaged 1,000 tips/bag,2 bag/pack, 5 packs/case

b). 200µl,1000µl, Extended 1000µl & Extra-Long 1000µl: Packaged 1,000 tips/bag/pack, 10 packs/case

2.Racked Tips (10µl, 200µl, 1000µl and Extended 1000µl)

a). 10µl, 200µl: Packaged 96 tips/rack and 100 racks/case

b). 1000µl: Packaged 100 tips/rack and 60 racks/case

c). Extended 1000µl: Packaged 96 tips/rack and 60 racks/case

V. DESCRIPTION

Item	Size	Packaging	Sterile
20-0010	10µl	Bulk, 1,000 /bag,2 bag/pack, 5 packs/case	No
20-0200	200µl	Bulk, 1,000 /bag/pack, 10 packs/case	No
20-1000	1000µl	Bulk, 1,000 /bag/pack, 10 packs/case	No
20-1250	Extended 1000µl	Bulk, 1,000 /bag/pack, 10 packs/case	No
21-0010	10µl	Racked, 96 tips/rack and 100 racks/case	Yes
21-0200	200µl	Racked, 96 tips/rack and 100 racks/case	Yes
21-1000	1000µl	Racked, 100 tips/rack and 60 racks/case	Yes
21-1250	Extended 1000µl	Racked, 96 tips/rack and 60 racks/case	Yes
20-1251	Extra-Long, 1000µl	Bulk, 1,000 /bag/pack, 10 packs/case	No

VI. STERILITY

1. Products are EO Sterilized according to ISO13485 standard.
2. For each lot, sterilization records are recorded and signed off by qualified personnel for product release.

VII. CERTIFICATION

Biologix products are manufactured completely according to the TUV ISO 9001:2015 standard.

VIII. RESTRICTIONS

Refer to the Chemical Resistance Chart in our catalog, and available within our online catalog.

IX. PRODUCT PHOTOS

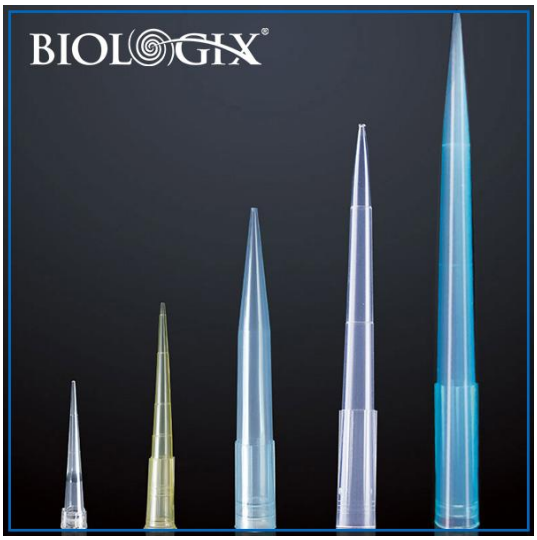

X. PRODUCT PARAMETER

Dimensions = mm

Cat #	Description	A	B	C	D	E	F	G	H
20-0010	Pipet Tip	31.6	O.D. 6.0	O.D. 3.8	O.D. 0.86	3.9	16.8	24.7	-
20-0200	Pipet Tip	50.5	O.D. 7.5	O.D. 6.1	O.D. 0.9	16.1	-	-	-
20-1000	Pipet Tip	77.9	O.D. 9.6	O.D. 8.2	O.D. 1.1	20.3	-	-	-
20-1250	Pipet Tip	88.42	43.41	17.75	25.53	O.D. 7.43	O.D. 8.6	O.D. 1.3	O.D.0.72
20-1251	Pipet Tip	101.65	49.22	25.58	28.50	O.D. 7.90	O.D. 8.71	O.D. 1.47	O.D.0.71

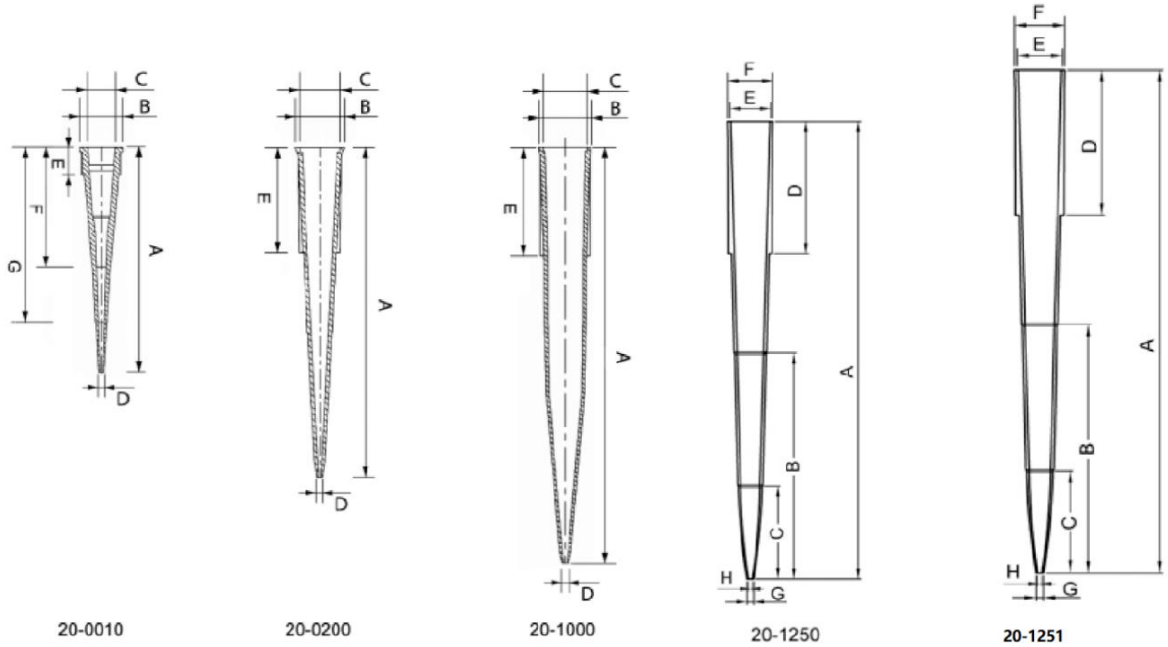

Dimensions=mm

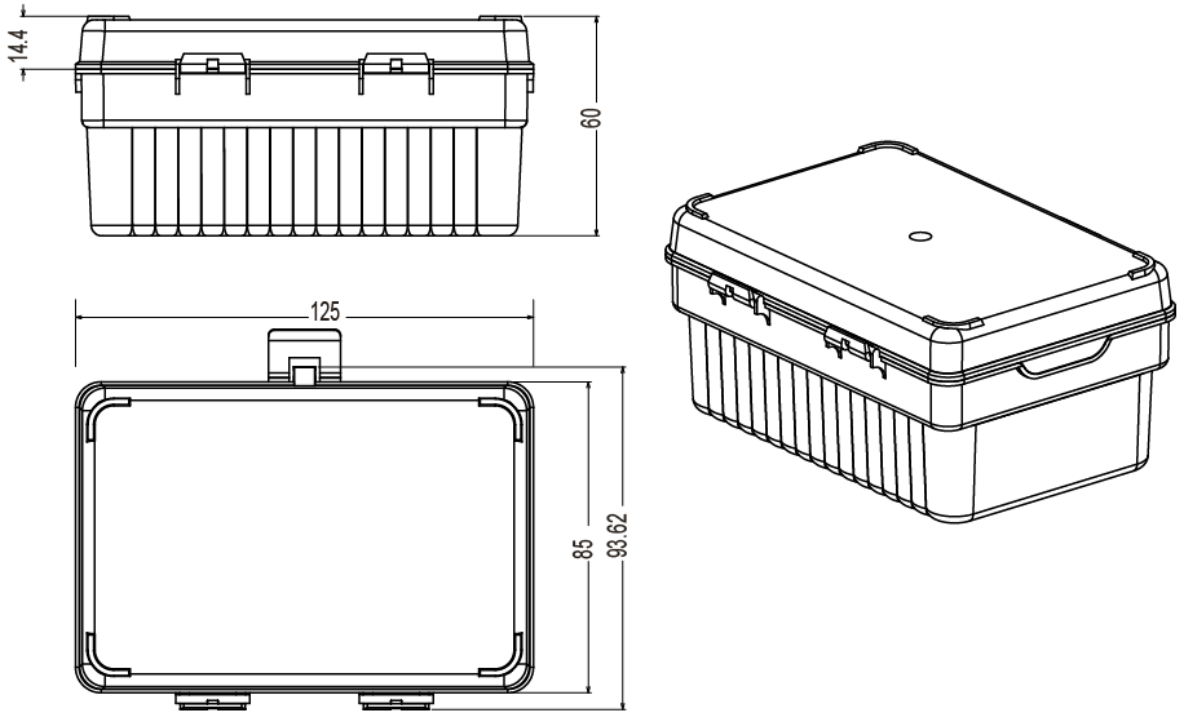

21-0010

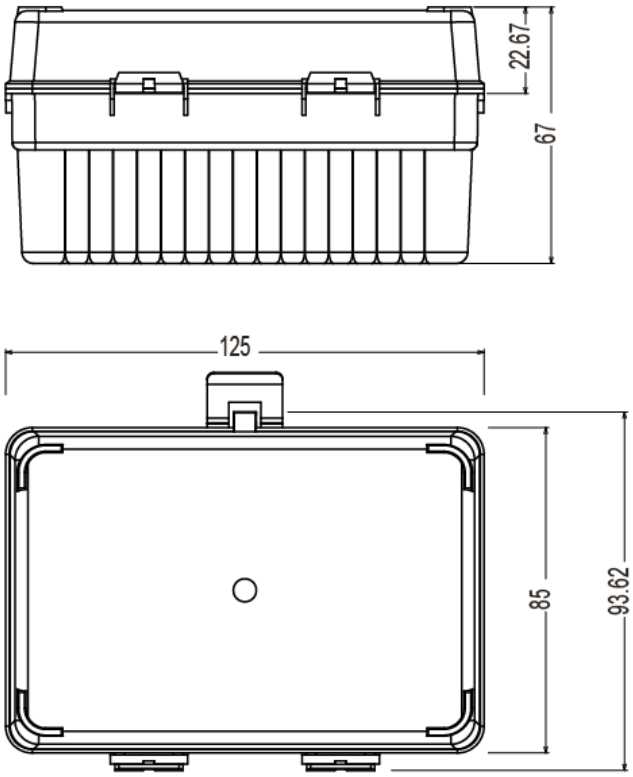

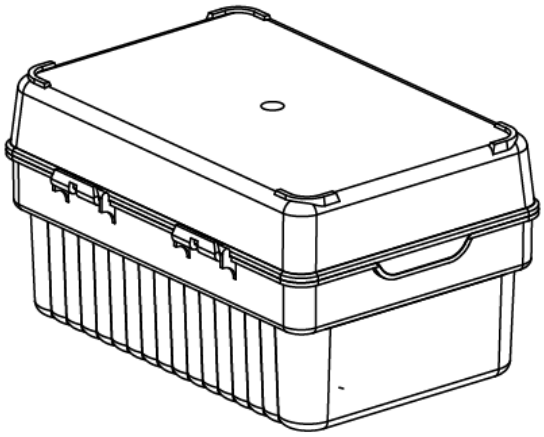

21-0200

Dimensions=mm

Cat #	Description	A	B	C	D	E	F	G
21-1000	Rack	109.3	103.1	101.4	48.43	65.2	111.3	111.3
		H	**I**	**J**	**K**	**L**	**M**	-
		11.52	19.95	Ø 8.02	136	128	125.8	-

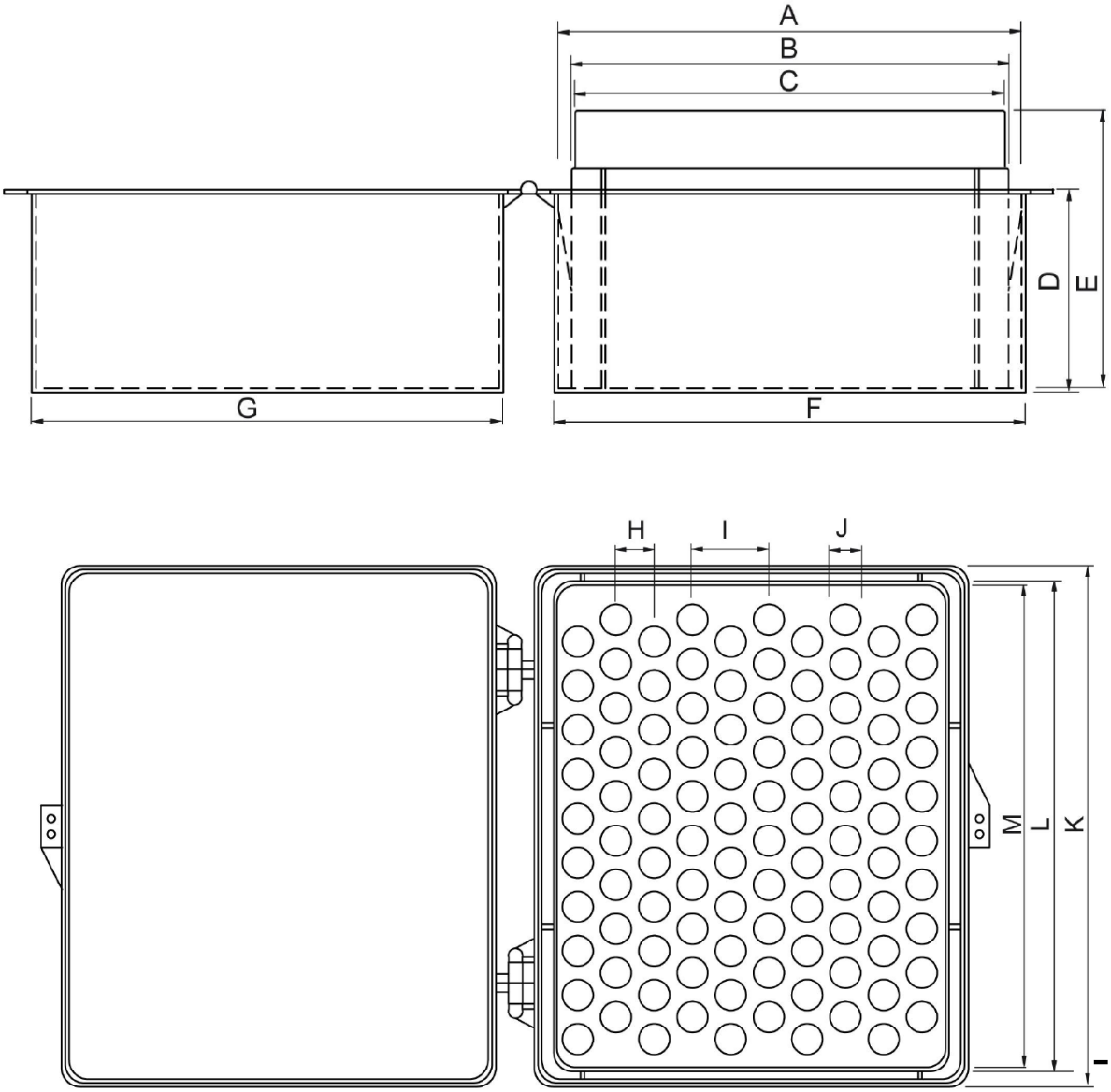

21-1000

Dimensions=mm

Cat #	Description	A	B	C	D	E	F	G
21-1250	Rack	69.8	30.2	26	3.2	18.6	191.91	173.8
		H	**I**	**J**	**K**	**L**	-	-
		85.2	85.4	99	63	9	-	-

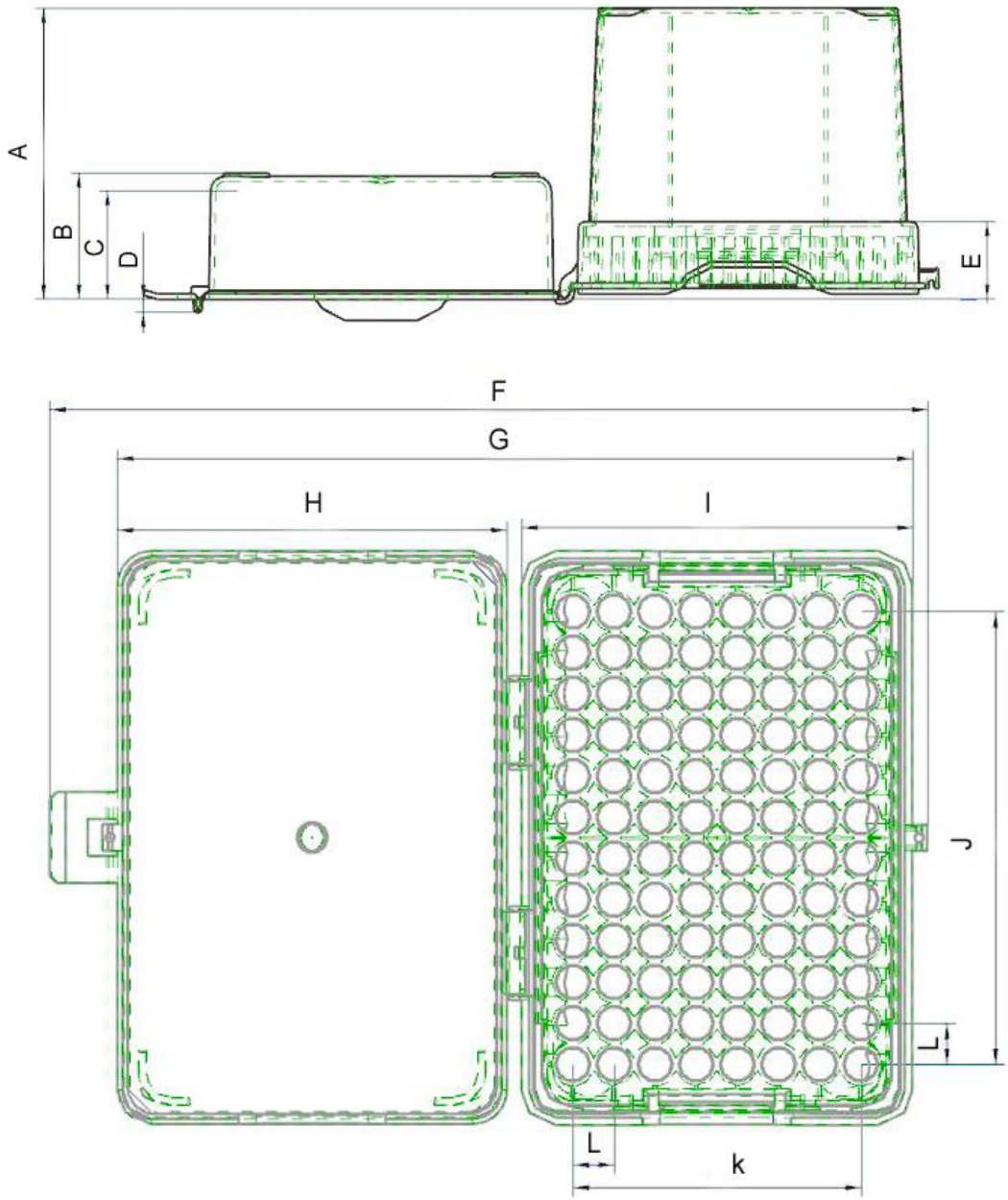

Filter Tips

I. APPLICATIONS

1. For use with pipettors for the measure and transfer of liquids/chemicals

II. FEATURES

1. Materials: Tips are made of PP, filters are made of UHMWPE
2. Chemically resistant to alcohols and mild organic solvents
3. 100% inert
4. Both tips and racks are both autoclavable
5. Certified RNase & DNase Free

III. FILTER TIPS DESIGN

1. 10μl, 200μl, and 1000μl tip sizes
2. All sizes available in non-sterile bulk or sterile racked packaging
3. The filter's average pore size of 20 μm eliminates errors caused by saturation vapor pressure

IV. PACKAGING

1.Bulk Tips

a). Packaged 1,000 Pieces/Pack and 10 Packs/case

2.Racked Tips

a). Packaged 96 Pieces/Rack, 10 Racks/Pack, 10 Packs/Case(10μl, 200μl,)

b). Packaged 96 Pieces/Rack, 6 Racks/Pack, 10 Packs/Case(1000μl)

V. DESCRIPTION

Item	Size	Packaging	Sterile
22-0010	10μL	1000 Pieces/Pack, 10 Packs/Case	No
22-0011	10μL	1000 Pieces/Pack, 10 Packs/Case	No
23-0010	10μL	96 Pieces/Rack, 10 Racks/Pack, 10 Packs/Case	Yes
23-0011	10μL	96 Pieces/Rack, 10 Racks/Pack, 10 Packs/Case	Yes
22-0200	200μL	1000 Pieces/Pack, 10 Packs/Case	No
22-0201	200μL	1000 Pieces/Pack, 10 Packs/Case	No
23-0200	200μL	96 Pieces/Rack, 10 Racks/Pack, 10 Packs/Case	Yes
23-0201	200μL	96 Pieces/Rack, 10 Racks/Pack, 10 Packs/Case	Yes
22-1000	1000μL	1000 Pieces/Pack, 10 Packs/Case	No
22-1001	1000μL	1000 Pieces/Pack, 10 Packs/Case	No
23-1000	1000μL	96 Pieces/Rack, 6 Racks/Pack, 10 Packs/Case	Yes
23-1001	1000μL	96 Pieces/Rack, 6 Racks/Pack, 10 Packs/Case	Yes

VI. STERILITY

1. N/A

VII. CERTIFICATION

Biologix products are manufactured completely according to the TUV ISO 9001:2015 standard.

VIII. RESTRICTIONS

Refer to the Chemical Resistance Chart in our catalog, and available within our online catalog.

IX. PRODUCT PHOTOS

X. PRODUCT PARAMETER

Dimensions=mm

Cat #	Description	A	B	C	D	E	F
22-0010	Filter Tips	39.10	18.00	6.30	5.00	0.40	0.70
22-0011	Filter Tips	39.10	18.00	6.30	5.00	0.40	0.70

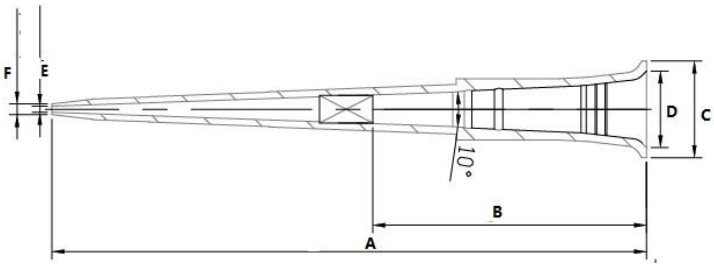

10μL Filter Tips

Cat #	Description	A	B	C	D	E	F
22-0200	Filter Tips	59.30	16.00	7.10	5.23	0.52	0.92
22-0201	Filter Tips	59.30	16.00	7.10	5.23	0.52	0.92

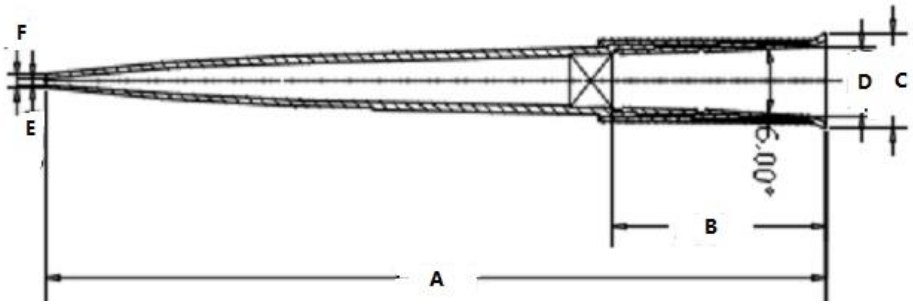

200µL Filter Tips

Cat #	Description	A	B	C	D	E	F
22-1000	Filter Tips	88.10	9.00	8.50	7.20	0.82	1.2
22-1001	Filter Tips	88.10	9.00	8.50	7.20	0.82	1.2

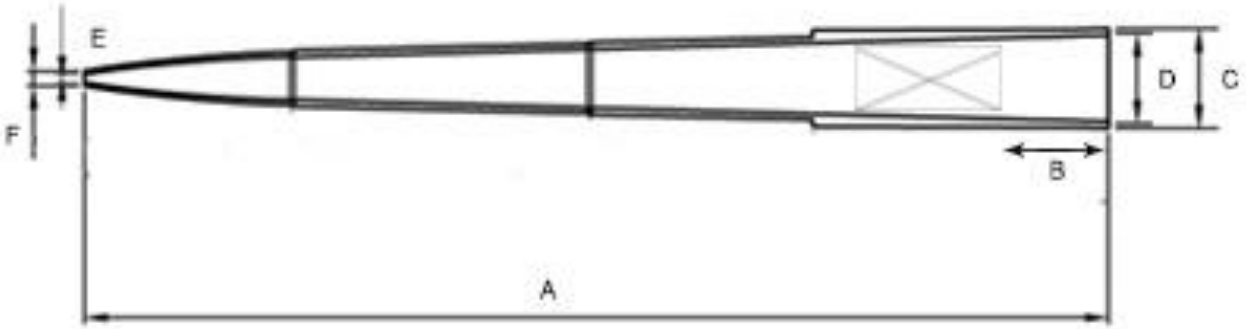

1000µL Filter Tips

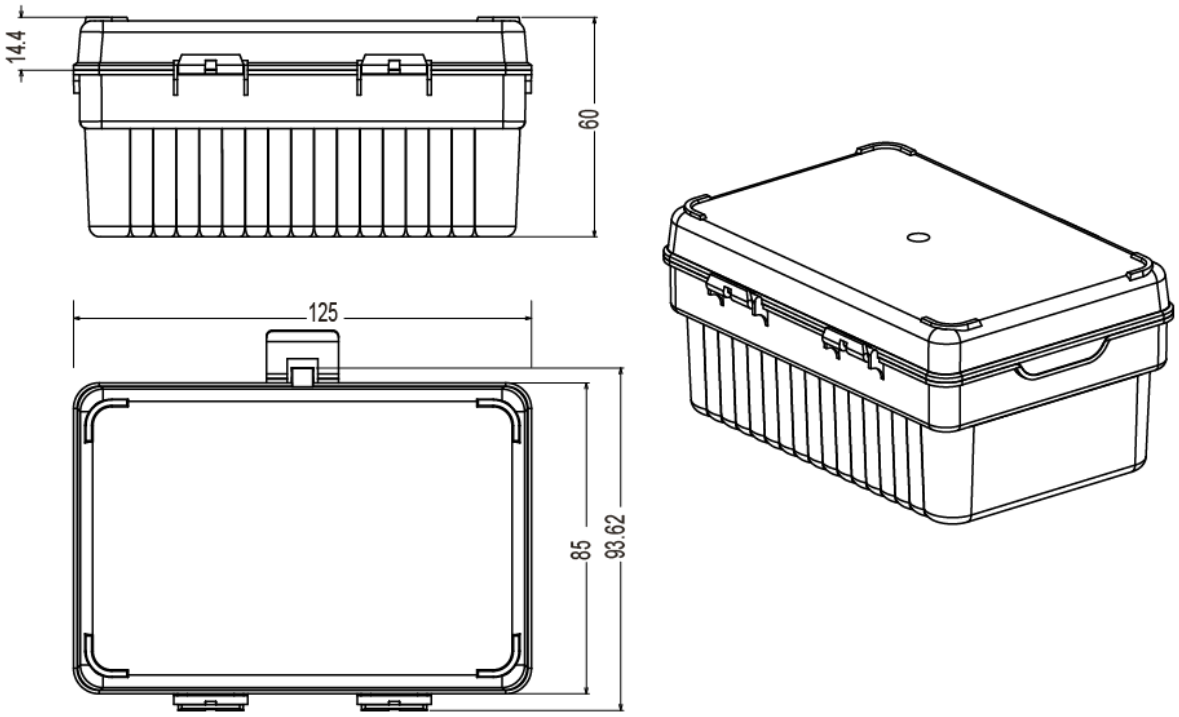

23-0010 & 23-0011

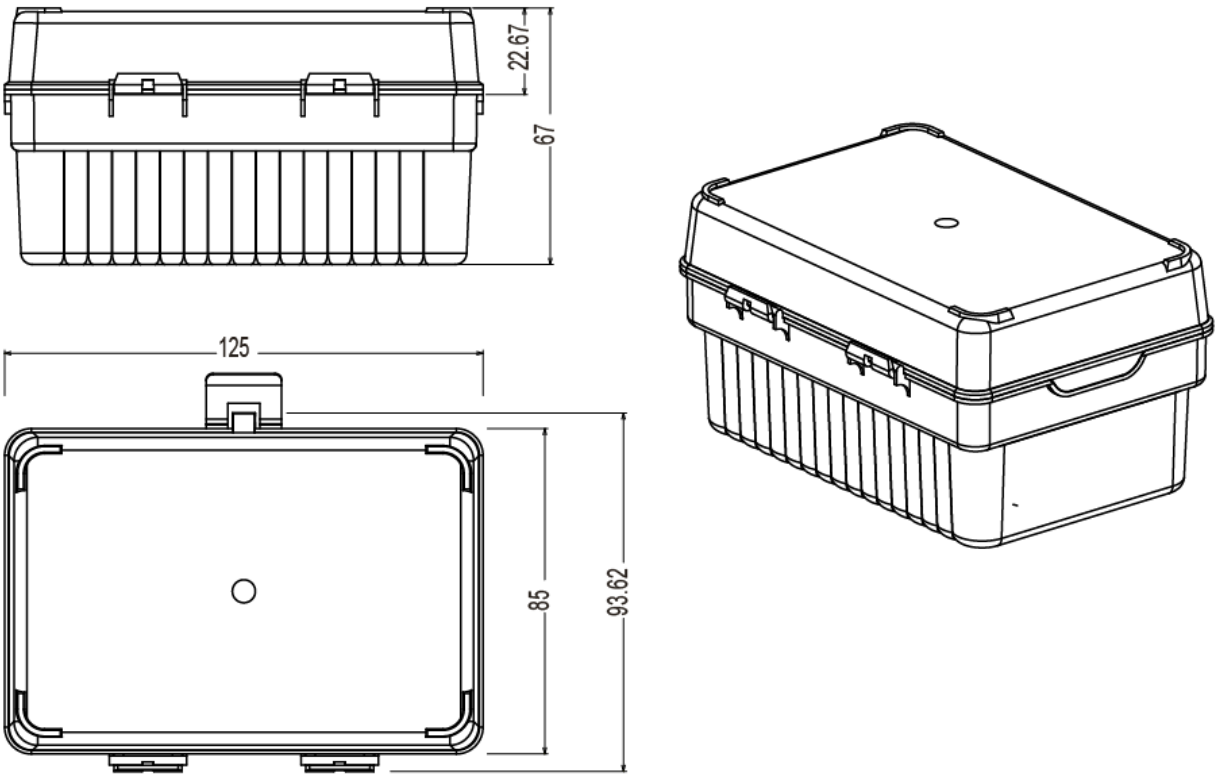

23-0200 & 23-0201

Dimensions=mm

Cat #	Description	A	B	C	D	E	F	G
23-1000 **23-1001**	**Rack**	69.8	30.2	26	3.2	18.6	191.91	173.8
		H	**I**	**J**	**K**	**L**	-	-
		85.2	85.4	99	63	9	-	-

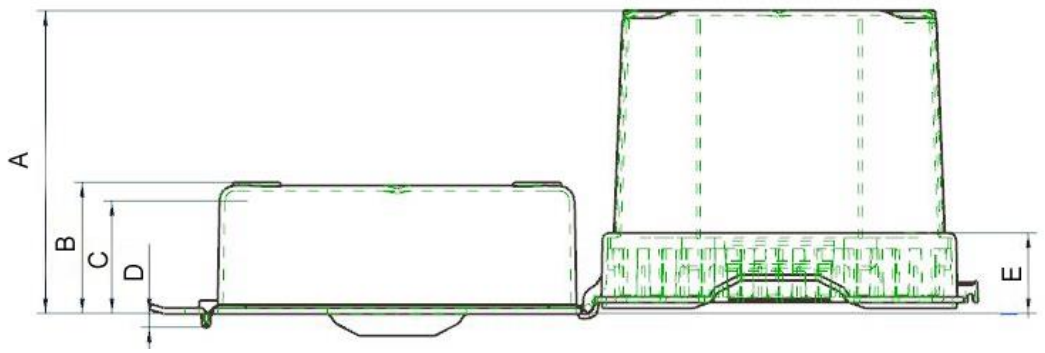

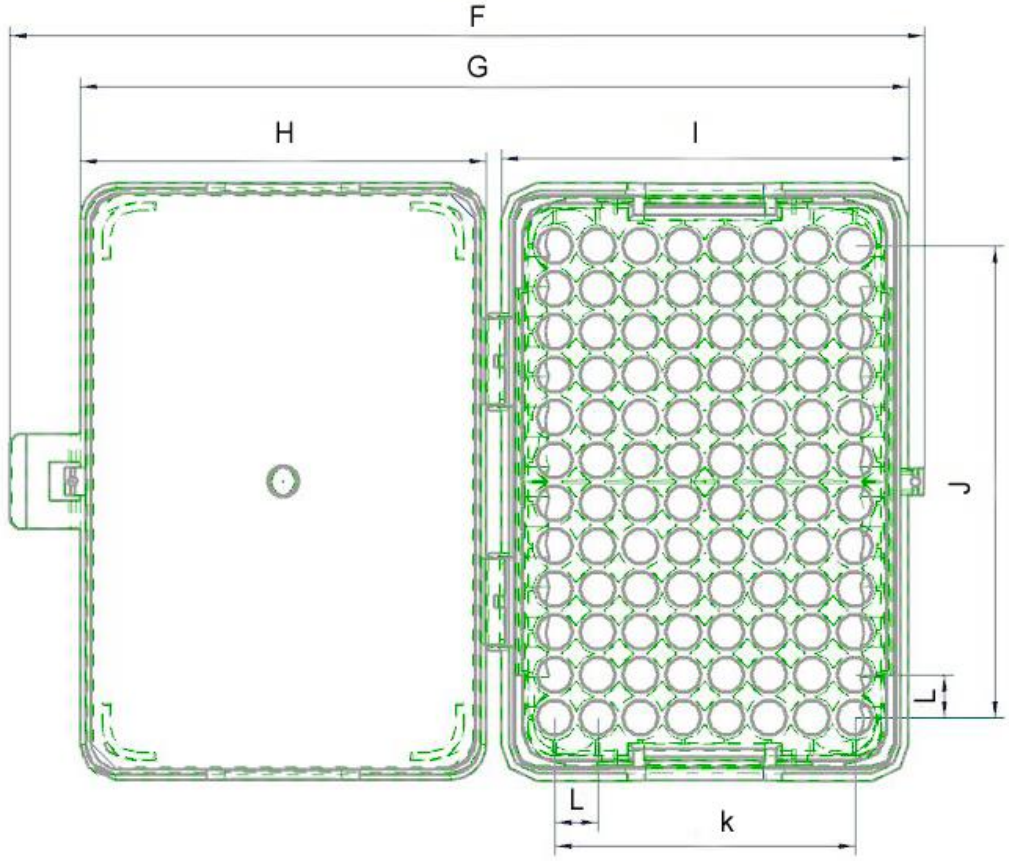

Racked Filter Tips

I. APPLICATIONS

1. For use with pipettors for the measure and transfer of liquids/chemicals

II. FEATURES

1. Materials: Tips are made of PP, filters are made of UHMWPE.
2. Chemically resistant to alcohols and mild organic solvents.
3. 100% inert.
4. Sterile. Certified RNase & DNase Free, non-pyrogen..
5. Low retention treated tips undergo a coating-free treatment and will not contaminate samples. Non low retention tips also available.
6. User-friendly label on the tip rack.

III. FILTER TIPS DESIGN

1. 10μl, 20μl, 50μl,100μl, 200μl, and 1000μl tip sizes.
2. Sterile racked packaging.
3. Filters eliminate errors caused by saturation vapor pressure.

IV. DESCRIPTION

Cat. No.	Description
23-0011S	10μl Filter Tips, rack pack, sterile. Extra-long, low-retention. 96 Pieces/Rack, 50 Racks/Case
23-0010S	10μl Filter Tips, rack pack, sterile. Extra-long. 96 Pieces/Rack, 50 Racks/Case
23-0021S	20μl Filter Tips, rack pack, sterile. Low-retention. 96 Pieces/Rack, 50 Racks/Case
23-0020S	20μl Filter Tips, rack pack, sterile. 96 Pieces/Rack, 50 Racks/Case
23-0051S	50μl Filter Tips, rack pack, sterile. Low-retention. 96 Pieces/Rack, 50 Racks/Case
23-0050S	50μl Filter Tips, rack pack, sterile. 96 Pieces/Rack, 50 Racks/Case
23-0101S	100μl Filter Tips, rack pack, sterile. Low-retention. 96 Pieces/Rack, 50 Racks/Case
23-0100S	100μl Filter Tips, rack pack, sterile. 96 Pieces/Rack, 50 Racks/Case
23-0201S	200μl Filter Tips, rack pack, sterile. Extra-long, low-retention. 96 Pieces/Rack, 50 Racks/Case
23-0200S	200μl Filter Tips, rack pack, sterile. Extra-long. 96 Pieces/Rack, 50 Racks/Case
23-1001S	1000μl Filter Tips, rack pack, sterile. Extra-long, low-retention. 96 Pieces/Rack, 50 Racks/Case
23-1000S	1000μl Filter Tips, rack pack, sterile. Extra-long. 96 Pieces/Rack, 50 Racks/Case

V. STERILITY

1. Yes

VI. CERTIFICATION

Biologix products are manufactured completely according to the TUV ISO 9001:2015 standard.

VII. RESTRICTIONS

Refer to the Chemical Resistance Chart in our catalog, and available within our online catalog.

VIII. PRODUCT Photoes

23-0011S 23-0010S

23-0021S 23-0020S

23-0051S 23-0050S

23-0101S 23-0100S

23-0201S 23-0200S

23-1001S 23-1000S

IX. PRODUCT PARAMETER **Dimensions=mm**

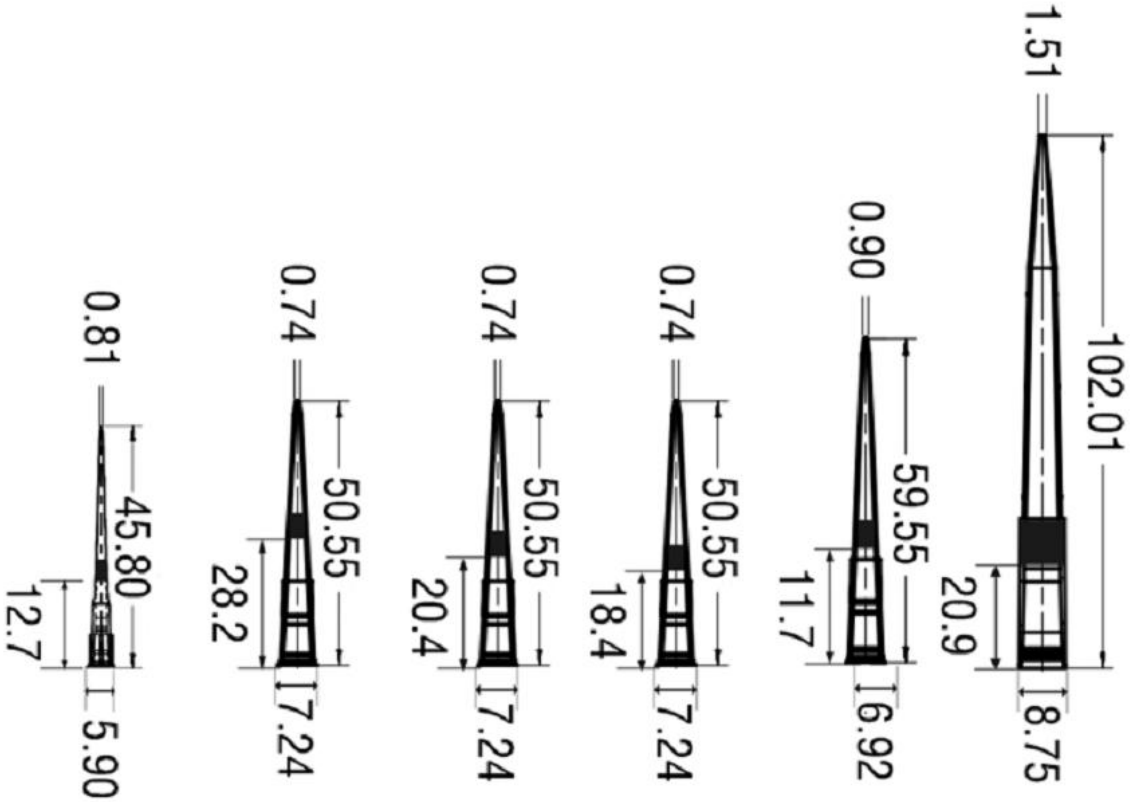

10μl **20μl** **50μl** **100μl** **200μl** **1000μl**

Pipet Tips

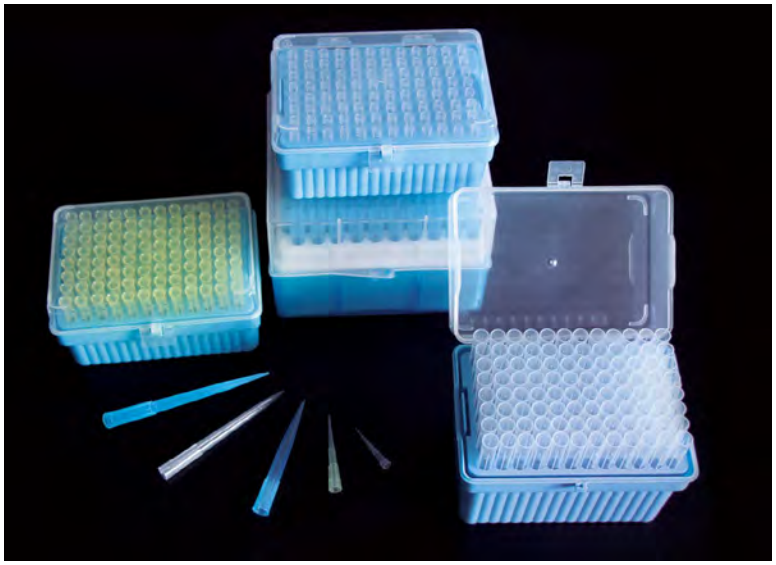

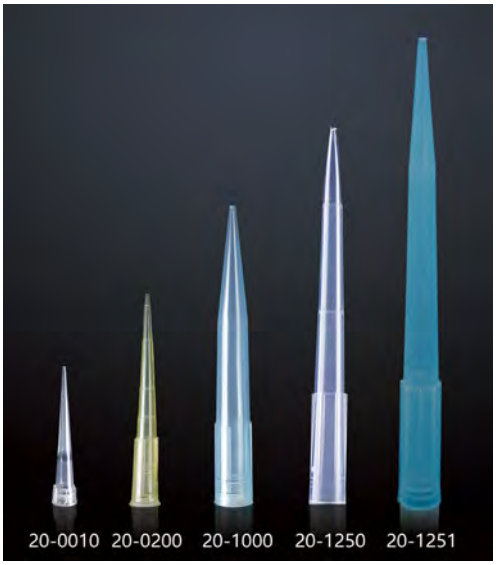

>> Features

- Made of polypropylene, autoclavable
- Available in 10µl, 200µl and 1000µl sizes, suitable for standard manual and electronic pipettes
- 10µl and 200µl tips are graduated, 200µl tips have a beveled point design that reduces sample retention
  Extended 1000µl tips facilitate pipetting from deep or narrow containers
- RNase & DNase free, non-pyrogenic
- Available in racked package (sterile) and bulk package (non-sterile)

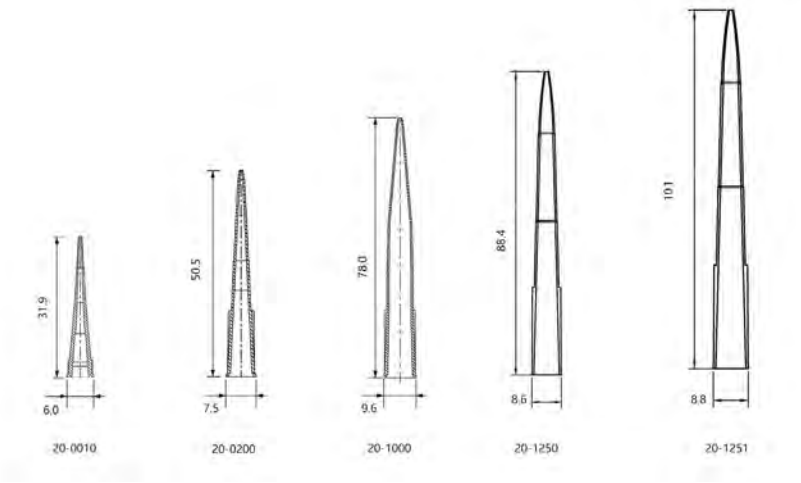

Dimensions = mm

Cat #	Volume	Color	Sterile	Unit	Total
20-0010	10µl	Natural	No	1,000 /Bag, 2 Bags /Pack, 5 Packs/Case	10000 /Case
21-0010	10µl	Natural	Yes	96 /Rack, 10 Racks/Pack, 10 Packs/Case	9600 /Case
20-0200	200µl	Yellow	No	1,000 /Bag/Pack, 10 Packs/Case	10000 /Case
21-0200	200µl	Yellow	Yes	96 /Rack, 10 Racks/Pack, 10 Packs/Case	9600 /Case
20-1000	1000µl	Blue	No	1,000 /Bag/Pack, 10 Packs/Case	10000 /Case
21-1000	1000µl	Blue	Yes	100 /Rack, 6 Racks/Pack, 10 Packs/Case	6000 /Case
20-1250	1000µl Extended	Natural	No	1,000 /Bag/Pack, 10 Packs/Case	10000 /Case
21-1250	1000µl Extended	Natural	Yes	96 /Rack, 6 Racks/Pack, 10 Packs/Case	5760 /Case
20-1251	1000µl Extra-Long	Blue	No	1,000 /Bag/Pack, 10 Packs/Case	10000 /Case

>> Features

- Tips are made of medical grade polypropylene, and filters are made of highly hydrophobic UHMWPE
- Filters prevent cross-contamination and damage to samples, ensure accurate and precise sample aspiration, and protect the user by preventing sample liquid or vapor from entering the pipette body
- Standard filter tips and low retention filter tips available in all sizes
- Low retention treated tips undergo a coating-free treatment and will not contaminate samples
- All filter tips are autoclavable
- Available in racked package (sterile) and bulk package (non-sterile)
- RNase & DNase free, non-pyrogenic

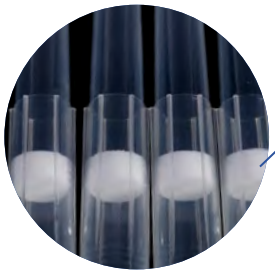

Small and uniform filter pore size ensures the accuracy and precision of sample aspiration

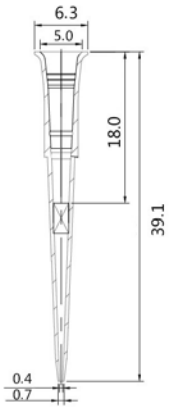

10µl Dimensions=mm

Cat #	Volume	Color	Sterile	Low Retention	Unit	Total
22-0010	10µl	Natural	No	No	1,000 /Bag, 2 Bags/Pack, 5 Packs /Case	10000 /Case
22-0011	10µl	Natural	No	Yes	1,000 /Bag, 2 Bags/Pack, 5 Packs /Case	10000 /Case
23-0010	10µl	Natural	Yes	No	96 /Rack, 10 Racks/Pack, 10 Packs/Case	9600 /Case
23-0011	10µl	Natural	Yes	Yes	96 /Rack, 10 Racks/Pack, 10 Packs/Case	9600 /Case
22-0200	200µl	Natural	No	No	1,000 /Bag/Pack, 10 Packs /Case	10000 /Case
22-0201	200µl	Natural	No	Yes	1,000 /Bag/Pack, 10 Packs /Case	10000 /Case
23-0200	200µl	Natural	Yes	No	96 /Rack, 10 Racks/Pack, 10 Packs/Case	9600 /Case
23-0201	200µl	Natural	Yes	Yes	96 /Rack, 10 Racks/Pack, 10 Packs/Case	9600 /Case
22-1000	1000µl	Natural	No	No	1,000 /Bag/Pack, 10 Packs /Case	10000 /Case
22-1001	1000µl	Natural	No	Yes	1,000 /Bag/Pack, 10 Packs /Case	10000 /Case
23-1000	1000µl	Natural	Yes	No	96 /Rack, 6 Racks/Pack, 10 Packs/Case	5760 /Case
23-1001	1000µl	Natural	Yes	Yes	96 /Rack, 6 Racks/Pack, 10 Packs/Case	5760 /Case

Filter Tips-S Series

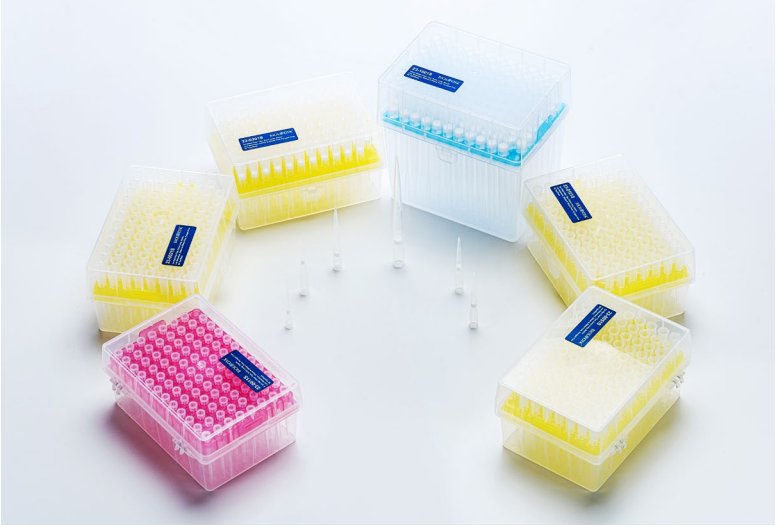

>> Features

- Made in Bioclean room
- Extremely straight low retention tips ensure accurate and precise sample
- Extra-long tips: 10µl with max volume 20µl, 200µl with max volume 300µl, and 1000µl with max volume 1250µl
- Racked filter tips, sterile
- DNase & RNase free, non-pyrogenic

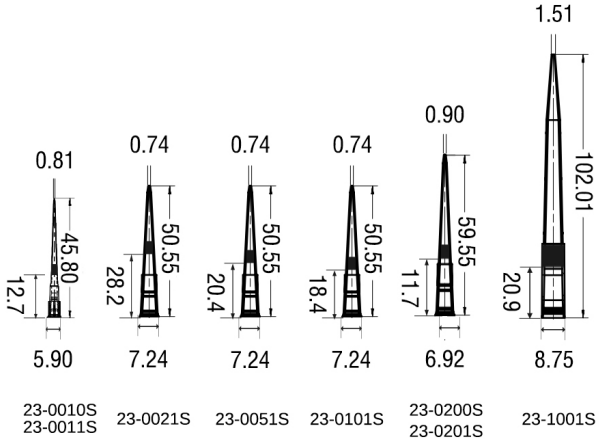

Dimensions = mm

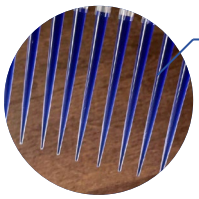

Extremely straight tips

User-friendly label on the tip rack

Clear racks enable convenient observation of tips

Cat #	Volume	Color	Sterile	Low Retention	Unit	Total
23-0010S	10µl Extended	Natural	Yes	No	96 Pieces/Rack, 50 Racks/Case	4800 /Case
23-0011S	10µl Extended	Natural	Yes	Yes	96 Pieces/Rack, 50 Racks/Case	4800 /Case
23-0020S	20µl	Natural	Yes	No	96 Pieces/Rack, 50 Racks/Case	4800 /Case
23-0021S	20µl	Natural	Yes	Yes	96 Pieces/Rack, 50 Racks/Case	4800 /Case
23-0050S	50µl	Natural	Yes	No	96 Pieces/Rack, 50 Racks/Case	4800 /Case
23-0051S	50µl	Natural	Yes	Yes	96 Pieces/Rack, 50 Racks/Case	4800 /Case
23-0100S	100µl	Natural	Yes	No	96 Pieces/Rack, 50 Racks/Case	4800 /Case
23-0101S	100µl	Natural	Yes	Yes	96 Pieces/Rack, 50 Racks/Case	4800 /Case
23-0200S	200µl Extended	Natural	Yes	No	96 Pieces/Rack, 50 Racks/Case	4800 /Case
23-0201S	200µl Extended	Natural	Yes	Yes	96 Pieces/Rack, 50 Racks/Case	4800 /Case
23-1000S	1000µl Extended	Natural	Yes	No	96 Pieces/Rack, 50 Racks/Case	4800 /Case
23-1001S	1000µl Extended	Natural	Yes	Yes	96 Pieces/Rack, 50 Racks/Case	4800 /Case

Pipet Tip Compatibility

Pipettor Brand/Make	Volume Range	Volume/Biologix Tip	0.5-10µl 20-0010	0.5-10µl 21-0010	1-200µl 20-0200	1-200µl 21-0200	100-1000µl 20-1000	100-1000µl 21-1000	100-1000µl 20-1250	100-1000µl 20-1251	100-1000µl 21-1250	0.5-10µl 22-0010	0.5-10µl 22-0011	0.5-10µl 23-0010	1-200µl 23-0011	1-200µl 22-0200	1-200µl 22-0201	1-200µl 23-0200	100-1000µl 23-0201	100-1000µl 22-1000	100-1000µl 22-1001	100-1000µl 23-1000	100-1000µl 23-1001
Axygen Axypet (single channel)	0.1-2µl		√	√								√	√	√	√								
	0.5-10µl		√	√								√	√	√	√								
	2-20µl				√	√																	
	5-50µl				√	√																	
	10-100µl				√	√																	
	20-200µl				√	√										√	√	√	√				
	50-250µl																						
	100-1000µl																			√	√	√	
Axygen Axypet (multichannel)	1-10µl		√	√								√	√	√	√								
	5-50µl				√	√																	
	20-200µl				√	√										√	√	√	√				
	50-300µl				√	√																	
Axygen Axypet-16	0.2-2µl																						
	0.5-10µl																						
	5-50µl																						
Biohit Proline (single channel)	0.2-10µl		√	√								√	√	√	√								
	5-100µl				√	√																	
	10-250µl				√	√										√	√	√	√				
	10-500µl						√	√	√	√	√									√	√	√	
	50-1000µl						√	√	√	√	√									√	√	√	
Biohit Proline (multichannel)	0.2-10µl		√	√								√	√	√	√								
	5-100µl				√	√										√	√	√	√				
	25-250µl				√	√										√	√	√	√				
Biohit e-Line (single channel)	1-10µl		√	√								√	√	√	√								
	5-120µl				√	√																	
	10-300µl				√	√																	
	50-1000µl						√	√	√	√	√									√	√	√	
Biohit e-Line (multichannel)	0.2-10µl		√	√								√	√	√	√								
	5-120µl				√	√																	
	10-300µl				√	√																	
Biohit m-Line (single channel)	0.5-10µl																						
	2-20µl				√	√																	
	10-100µl				√	√																	

Pipet Tip Compatibility

0.5-10µl	0.5-10µl	1-200µl	1-200µl	100-1000µl	100-1000µl	100-1000µl	100-1000µl	100-1000µl	0.5-10µl	0.5-10µl	0.5-10µl	0.5-10µl	1-200µl	1-200µl	1-200µl	1-200µl	100-1000µl	100-1000µl	100-1000µl	Volume Range	Pipettor Brand/Make
		√	√										√	√	√	√				20-200µl	Biohit m-Line (multichannel)
				√	√	√	√	√									√	√	√	100-1000µl	
√	√								√	√	√	√								0.5-10µl	
		√	√										√	√	√	√				5-100µl	
		√	√										√	√	√	√				30-300µl	
√	√								√	√	√	√								0.2-2µl	Capp Aero (multichannel)
√	√								√	√	√	√								0.5-10µl	
		√	√																	5-50µl	
		√	√																	10-100µl	
		√	√										√	√	√	√				25-200µl	
		√	√										√	√	√	√				50-300µl	
				√	√	√	√	√									√	√	√	100-1000µl	
																				0.2-2µl	384 Format (multichannel)
																				0.5-10µl	
																				5-50µl	
√	√								√	√	√	√								0.1-1µl	BrandTech Transferpette (single channel)
√	√								√	√	√	√								0.5-10µl	
																				2-20µl	
		√	√																	2-20µl	
		√	√																	5-50µl	
		√	√																	10-100µl	
		√	√										√	√	√	√				20-200µl	
		√	√										√	√	√	√				25-250µl	
				√	√	√	√	√									√	√	√	100-1000µl	
√	√								√	√	√	√								0.5-10µl	BrandTech Transferpette (multichannel)
		√	√																	2-20µl	
		√	√																	2.5-25µl	
		√	√																	5-50µl	
		√	√																	10-100µl	
		√	√																	20-200µl	
		√	√																	30-300µl	
√	√								√	√	√	√								0.5-10µl	Eppendorf Electronic
		√	√																	5-100µl	
		√	√										√	√	√	√				2-200µl	
				√	√	√	√	√									√	√	√	50-1000µl	

Pipet Tip Compatibility

Pipettor Brand/make	Volume Range	Volume/Biologix Tip	0.5-10µl	0.5-10µl	1-200µl	1-200µl	100-1000µl	100-1000µl	100-1000µl	100-1000µl	100-1000µl	0.5-10µl	0.5-10µl	0.5-10µl	0.5-10µl	1-200µl	1-200µl	1-200µl	1-200µl	100-1000µl	100-1000µl	100-1000µl
			20-0010	21-0010	20-0200	21-0200	20-1000	21-1000	20-1250	20-1251	21-1250	22-0010	22-0011	23-0010	23-0011	22-0200	22-0201	23-0200	23-0201	22-1000	22-1001	23-1000
																						23-1001
Labnet Labpette (single channel)	0.1-2µl		√	√								√	√	√	√							
	0.5-10µl		√	√								√	√	√	√							
	2-20µl				√	√																
	10-100µl				√	√																
	20-200µl				√	√										√	√	√	√			
	100-1000µl						√	√	√	√	√									√	√	√
Labnet Labpette (multichannel)	1-10µl		√	√								√	√	√	√							
	5-50µl				√	√																
	20-200µl				√	√										√	√	√	√			
	50-300µl				√	√										√	√	√	√			
Labnet BioPette E (single channel)	0.5-10µl		√	√								√	√	√	√							
	2-20µl		√	√								√	√	√	√							
	10-200µl				√	√										√	√	√	√			
	100-1000µl						√	√	√	√	√									√	√	√
Labnet BioPette E (multichannel)	0.5-10µl		√	√								√	√	√	√							
	2-20µl		√	√								√	√	√	√							
	10-200µl				√	√										√	√	√	√			
	100-1000µl						√	√	√	√	√									√	√	√
MatrixImpact/ Impact²(s/mc)	2-125µl				√	√																
	5-250µl															√	√	√	√			
	15-1250µl								√	√	√									√	√	√
Nichiryo/Oxford Benchmate	0.5-10µl		√	√								√	√	√	√							
	2-20µl				√	√																
	10-50µl				√	√																
	10-100µl																					
	40-200µl																					
	100-1000µl																					
Rainin EDP3 (single channel)	E-MIC-10,0.5-10µl		√	√								√	√	√	√							
	E2-25,2.5-25µl				√	√																
	E2-100,10-100µl				√	√																
	E2-250,25-250µl				√	√										√	√	√	√			
	E2-1000,100-1000µl						√	√	√	√	√									√	√	√

Pipet Tip Compatibility

0.5-10µl 20-0010	0.5-10µl 20-0010	1-200µl 21-0010	1-200µl 20-0200	100-1000µl 21-0200	100-1000µl 20-1000	100-1000µl 21-1000	100-1000µl 20-1250	100-1000µl 20-1251	0.5-10µl 21-1250	0.5-10µl 22-0010	0.5-10µl 22-0011	0.5-10µl 23-0010	1-200µl 23-0011	1-200µl 22-0200	1-200µl 22-0201	1-200µl 23-0200	100-1000µl 23-0201	100-1000µl 22-1000	100-1000µl 22-1001	100-1000µl 23-1000	100-1000µl 23-1001	Volume/Biologix Tip	Volume Range	Pipettor Brand/make
√	√								√	√	√	√									0.1-10µl		Eppendorf Reference (single channel)& (multichannel)
		√	√																		2-20µl		
		√	√																		10-100µl		
		√	√										√	√	√	√					20-200µl		
				√	√	√	√	√					√	√	√	√	√	√	√		100-1000µl		
√	√								√	√	√	√									0.1-2.5µl		Eppendorf Research (singlechannel)
√	√								√	√	√	√									0.5-10µl		
		√	√																		2-20µl		
		√	√																		10-100µl		
		√	√										√	√	√	√					25-200µl		
				√	√	√	√	√									√	√	√		100-1000µl		
√	√								√	√	√	√									0.5-10µl		Eppendorf Research (multichannel)
																					5-100µl		
		√	√																		50-100µl		
		√	√										√	√	√	√					20-300µl		
		√	√										√	√	√	√					30-300µl		
		√	√	√	√												√	√	√		50-1200µl		
√	√								√	√	√	√									0.2-10µl		Thermo Scientific Finnpipette (single channel)
√	√								√	√	√	√									0.5-10µl		
		√	√																		5-40µl		
		√	√										√	√	√	√					40-200µl		
				√	√	√	√	√									√	√	√		100-1000µl		
				√	√	√	√	√									√	√	√		200-1000µl		
		√	√																		5-50µl		Thermo Scientific Finnpipette (multichannel)
		√	√										√	√	√	√					50-300µl		
√	√								√	√	√	√									P2, 0.1-2µl		Gilson Pipetman (single channel)
√	√								√	√	√	√									P10, 0.2-10µl		
		√	√																		P20, 2-20µl		
		√	√																		P100, 10-100µl		
		√	√										√	√	√	√					P200, 20-200µl		
				√	√	√	√	√									√	√	√		P1000, 100-1000µl		
		√	√										√	√	√	√					P200-M8, 20-200µl (m/ch)		

Pipet Tip Compatibility

Pipettor Brand/Make	Volume Range	Volume/Biologix Tip	20-0010	21-0010	20-0200	21-0200	20-1000	21-1000	20-1250	20-1251	21-1250	22-0010	22-0011	23-0010	23-0011	22-0200	22-0201	23-0200	23-0201	22-1000	22-1001	23-1000	23-1001
		0.5-10µl	0.5-10µl	1-200µl	1-200µl	100-1000µl	100-1000µl	100-1000µl	100-1000µl	100-1000µl	0.5-10µl	0.5-10µl	0.5-10µl	0.5-10µl	1-200µl	1-200µl	1-200µl	1-200µl	100-1000µl	100-1000µl	100-1000µl	100-1000µl	100-1000µl
Rainin EDP3 (multichannel)	EP-M8-10, 0.5-10µl	√	√								√	√	√	√									
	EP-M8-250, 10-250µl			√	√										√	√	√	√					
Rainin Latch Mode	R2, 0.1-2µl	√	√								√	√	√	√									
	R10, 0.2-10µl	√	√								√	√	√	√									
	R20, 2-20µl			√	√																		
	R100, 10-100µl			√	√																		
	R200, 20-200µl			√	√										√	√	√	√					
	R1000, 100-1000µl					√	√	√	√	√									√	√	√		
Socorex Calibra/Accura (single channel)	0.1-2µl	√	√								√	√	√	√									
	0.2-2µl	√	√								√	√	√	√									
	0.5-10µl	√	√								√	√	√	√									
	1-10µl	√	√								√	√	√	√									
	2-20µl			√	√																		
	10-100µl			√	√																		
	20-200µl			√	√										√	√	√	√					
	100-1000µl					√	√	√	√	√									√	√	√		
Socorex Calibra/ Accura (multichannel)	1-10µl	√	√								√	√	√	√									
	5-50µl			√	√										√	√	√	√					
	10-100µl			√	√										√	√	√	√					
	20-200µl			√	√										√	√	√	√					
	50-200µl			√	√										√	√	√	√					
VWR and VWR Signature (single channel)	0.1-2µl	√	√								√	√	√	√									
	0.5-10µl	√	√								√	√	√	√									
	2-20µl			√	√																		
	5-50µl			√	√																		
	10-100µl			√	√																		
	20-200µl			√	√										√	√	√	√					
	50-250µl			√	√										√	√	√	√					
	100-1000µl					√	√	√	√	√									√	√	√		
VWR and VWR Signature (multichannel)	1-10µl	√	√								√	√	√	√									
	5-50µl			√	√																		
	20-200µl			√	√										√	√	√	√					
	50-300µl			√	√										√	√	√	√					

Pipet Tip Compatibility

Pipette Brand		Eppendorf Research Plus						Gilson Pipetman(PG)						Gilson Pipetman(PN)						Gilson Pipetman(PL)					
Model / Range		0.1-2.5ul	0.5-10ul	2-20ul	10-100ul	20-200ul	100-1000ul	P2, 0.2-2ul	P10, 1-10ul	P20, 2-20ul	P100, 10-100ul	P200, 20-200ul	P1000, 100-1000ul	P2, 0.2-2ul	P10, 1-10ul	P20, 2-20ul	P100, 10-100ul	P200, 20-200ul	P1000, 100-1000ul	P2, 0.2-2ul	P10, 1-10ul	P20, 2-20ul	P100, 10-100ul	P200, 20-200ul	P1000, 100-1000ul
Volume	Product No.	Universal Fit Filter Tips																							
0.5–10ul	23–0010S	√	√					√	√					√	√					√	√				
	23–0011S	√	√					√	√					√	√					√	√				
1–20ul	23–0020S			√						√						√						√			
	23–0021S			√						√						√						√			
1–50ul	23–0050S				√						√	√					√	√					√	√	
	23–0051S				√						√	√					√	√					√	√	
1–100ul	23–0100S				√						√	√					√	√					√	√	
	23–0101S				√						√	√					√	√					√	√	
1–300ul	23–0200S					√						√						√						√	
	23–0201S					√						√						√						√	
100–1000ul	23–1000S						√						√						√						√
	23–1001S						√						√						√						√

Pipette Brand		Thermo Finnpipette (F1)												Thermo Finnpipette (F2)										Thermo Finnpipette (F3)									
Model / Range		0.2-2ul	1-10ul	1-10ul(μTip)	2-20ul	2-20ul(μTip)	5-50ul	5-50ul(μTip)	10-100ul	20-200ul	30-300ul	100-1000ul		0.2-2ul(μTip)	1-10ul	1-10ul(μTip)	2-20ul	2-20ul(μTip)	5-50ul	5-50ul(μTip)	10-100ul	20-200ul	100-1000ul	0.2-2ul	1-10ul	1-10ul(μTip)	2-20ul	2-20ul(μTip)	5-50ul	5-50ul(μTip)	10-100ul	20-200ul	100-1000ul
Volume	Product No.	Universal Fit Filter Tips																															
0.5–10ul	23–0010S	√	√												√									√	√								
	23–0011S	√	√												√									√	√								
1–20ul	23–0020S				√												√										√						
	23–0021S				√												√										√						
1–50ul	23–0050S						√		√	√									√		√	√							√		√	√	
	23–0051S						√		√	√									√		√	√							√		√	√	
1–100ul	23–0100S						√		√	√									√		√	√							√		√	√	
	23–0101S						√		√	√									√		√	√							√		√	√	
1–300ul	23–0200S										√											√										√	
	23–0201S										√											√										√	
100–1000ul	23–1000S											√											√										√
	23–1001S											√											√										√

Pipette Brand		BIOHIT Proline								BIOHIT Proline (Plus)								BRAND								
Model / Range		0.1-2.5ul	0.5-10ul	2-20ul	5-50ul	10-100ul	20-200ul	50-300ul	100-1000ul	0.1-3ul	0.5-10ul	2-20ul	5-50ul	10-100ul	20-200ul	30-300ul	100-1000ul	0.1-1ul	0.1-2.5ul	0.5-10ul	2-20ul	5-50ul	10-100ul	20-200ul	30-300ul	100-1000ul
Volume	Product No.	Universal Fit Filter Tips																								
0.5–10ul	23–0010S	√	√							√	√							√	√	√						
	23–0011S	√	√							√	√							√	√	√						
1–20ul	23–0020S			√								√									√					
	23–0021S			√								√									√					
1–50ul	23–0050S				√	√	√	√					√	√	√	√						√	√	√	√	
	23–0051S				√	√	√	√					√	√	√	√						√	√	√	√	
1–100ul	23–0100S					√	√	√						√	√	√							√	√	√	
	23–0101S					√	√	√						√	√	√							√	√	√	
1–300ul	23–0200S						√	√							√	√								√	√	
	23–0201S						√	√							√	√								√	√	
100–1000ul	23–1000S								√								√									√
	23–1001S								√								√									√

Rainin LTS Pipette Tips

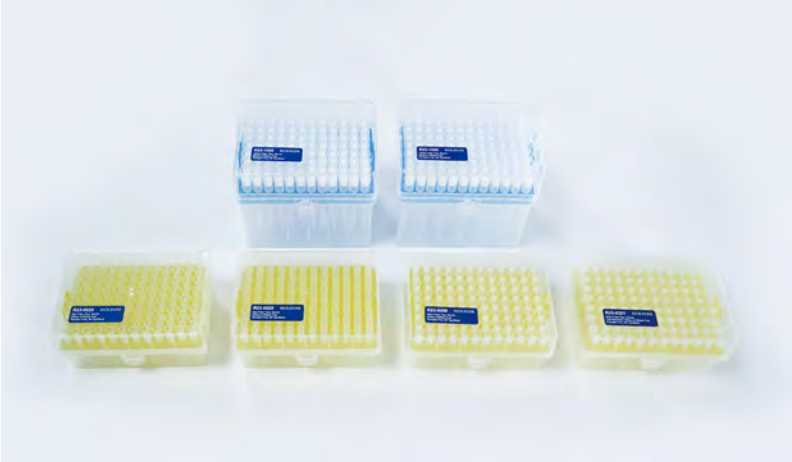

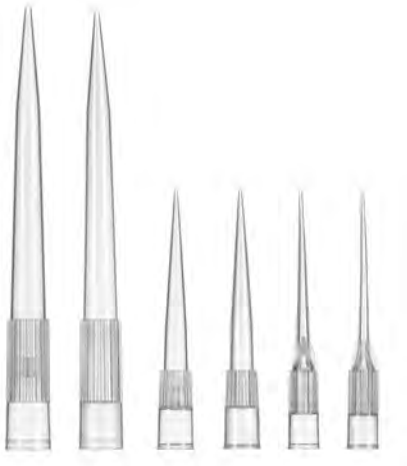

>> Features

- Tips are made of medical grade polypropylene, and filters are made of highly hydrophobic UHMWPE
- 20µl, 200µl, and 1000µl tips
- Filters prevent cross-contamination and damage to samples, ensure accurate and precise sample aspiration, and protect the user by preventing sample liquid or vapor from entering the pipette body
- Low-retention tips undergo a coating-free treatment and will not contaminate samples.
- User-friendly labels on tip racks enable convenient usage
- DNase & RNase Free, non-pyrogen
- Sterile SAL 10^{-6}

User-friendly labels on tip racks enable convenient usage

Cat #	Description	Unit
R23-0020	20µl tip, rack, with filter, sterile	96 Tips/Rack, 50 Racks/Case
R23-0021	20µl tip, rack, sterile, with filter, low retention	96 Tips/Rack, 50 Racks/Case
R23-0200	200µl tip, rack, with filter, sterile	96 Tips/Rack, 50 Racks/Case
R23-0201	200µl tip, rack, sterile, with filter, low retention	96 Tips/Rack, 50 Racks/Case
R23-1000	1000µl tip, rack, with filter, sterile	96 Tips/Rack, 50 Racks/Case
R23-1001	1000µl tip, rack, sterile, with filter, low retention	96 Tips/Rack, 50 Racks/Case

Non-filtered tips also available.

Automation Tips

>> Features

- Made of medical grade medical grade polypropylene /black conductive medical grade polypropylene
- Compatible with Beckman, Tecan, Hamilton, and Agilent workstations
- Clear/black conductive tips, filtered/non-filtered tips, sterile/non-sterile tips low-retention/non low-retention tips available
- DNase & RNase Free, non-pyrogen
- Electron beam sterilization, SAL 10^{-6}

Cat #	Volume	Matched Workstations	Features	Length mm	Unit
AB23-0020S	20µl	Beckman FX/NX	Clear, filtered, sterile, green racks	Standard (38.20)	96 Tips/Rack, 10 Racks/Pack, 5 Packs/Case
AB23-0050S	50µl	Beckman FX/NX	Clear, filtered, sterile, blue racks	Standard (51.20)	96 Tips/Rack, 10 Racks/Pack, 5 Packs/Case
AB23-0250S	250µl	Beckman FX/NX	Clear, filtered, sterile, purple racks	Standard (51.20)	96 Tips/Rack, 10 Racks/Pack, 5 Packs/Case
AT23-0020S	20µl	Tecan Genensis Freedom/ Freedom Evo	Clear, filtered, sterile	Standard (35.35)	96 Tips/Rack, 24 Racks/Case
AT23-0020CS	20µl	Tecan Genensis Freedom/ Freedom Evo	Conductive, filtered, sterile	Standard (35.35)	96 Tips/Rack, 24 Racks/Case
AT23-0050S	50µl	Tecan Genensis Freedom/ Freedom Evo	Clear, filtered, sterile	Standard (58)	96 Tips/Rack, 24 Racks/Case
AT23-0050CS	50µl	Tecan Genensis Freedom/ Freedom Evo	Conductive, filtered, sterile	Standard (58)	96 Tips/Rack, 24 Racks/Case
AT23-0200S	200µl	Tecan Genensis Freedom/ Freedom Evo	Clear, filtered, sterile	Standard (58.5)	96 Tips/Rack, 24 Racks/Case
AT23-0200CS	200µl	Tecan Genensis Freedom/ Freedom Evo	Conductive, filtered, sterile	Standard (58.5)	96 Tips/Rack, 24 Racks/Case
AT23-1000S	1000µl	Tecan Genensis Freedom/ Freedom Evo	Clear, filtered, sterile	Standard (95.5)	96 Tips/Rack, 16 Racks/Case
AT23-1000CS	1000µl	Tecan Genensis Freedom/ Freedom Evo	Conductive, filtered, sterile	Standard (95.5)	96 Tips/Rack, 16 Racks/Case
AH23-0050S	50µl	Hamilton Star/Starlet/Nimbus	Clear, filtered, sterile	Standard (50.4)	96 Tips/Rack, 24 Racks/Case
AH23-0050CS	50µl	Hamilton Star/Starlet/Nimbus	Conductive, filtered, sterile	Standard (50.4)	96 Tips/Rack, 24 Racks/Case
AH23-0300S	300µl	Hamilton Star/Starlet/Nimbus	Clear, filtered, sterile	Standard (60)	96 Tips/Rack, 24 Racks/Case
AH23-0300CS	300µl	Hamilton Star/Starlet/Nimbus	Conductive, filtered, sterile	Standard (60)	96 Tips/Rack, 24 Racks/Case
AH23-1000S	1000µl	Hamilton Star/Starlet/Nimbus	Clear, filtered, sterile	Standard (95)	96 Tips/Rack, 16 Racks/Case
AH23-1000CS	1000µl	Hamilton Star/Starlet/Nimbus	Conductive, filtered, sterile	Standard (95)	96 Tips/Rack, 16 Racks/Case
AA21-0030S	30µl	Agilent	Clear, sterilized	Standard (26.04)	384 Tips/Rack, 10 Racks/Pack, 5 Packs/Case
AA23-0250S	250µl	Agilent	Clear, filtered, sterilized	Standard (55.50)	96 Tips/Rack, 10 Racks/Pack, 5 Packs/Case